MIBRASA CHARCOAL OVEN HMB AB 75, 110, 160

Oven with cupboard below

TECHNICAL INFORMATION	HMB MINI	HMB 75	HMB 110	HMB 160
Diners*	35	75	110	160
Fire up time* (min)	20	25	30	35
Cooking temperature (ºF)	482-662	482-662	482-662	482-662
Cooking temperature (ºC)	250-350	250-350	250-350	250-350
Charcoal consumption* (lb/day)	16	29	40	45
Production* (lb/h)	55	154	220	265
Performance* (h)	8	9	10	10
Useful dimensions of grill (mm)	500 x 350	500 x 600	720 x 600	720 x 800
Equivalent power* (hp)	2,7	4,7	6,7	8
Exhaust rate (ft^3/s)	24,52	27,47	31,39	34,33

** Approximate data*

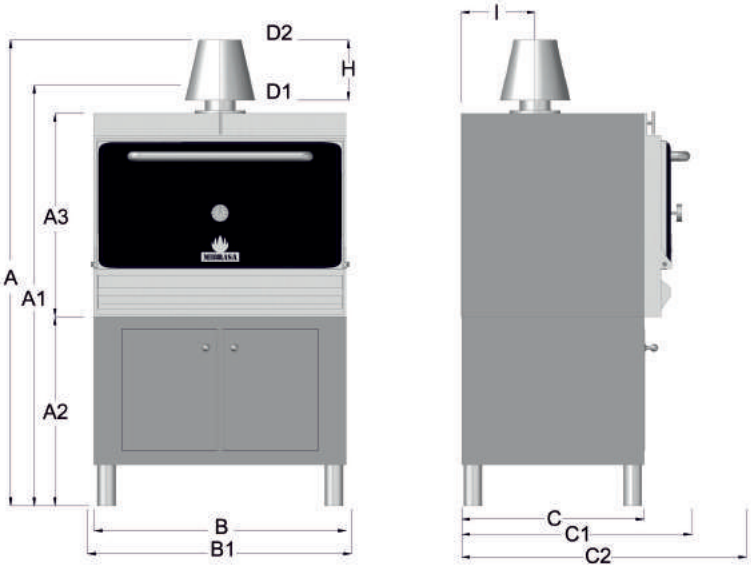

INCLUDED ACCESSORIES

- Grill
- Oven tongs
- Charcoal ember poker
- Ash shovel
- Grill brush

OPTIONAL ACCESSORIES

- Extra grill
- Firebreak
- Dissipating filter
- Cookware
- Steel wheels with brakes

Model	A	A1	A2	A3	B	B1	C	C1	C2	H	I	D1	D2
HMB AB 75	1660	1480	740	650	700	730	640	820	1080	230	300	115	150
HMB AB 110	1710	1530	690	740	920	950	640	820	1170	230	300	115	150
HMB AB 160	1710	1530	690	740	920	950	840	1020	1360	230	350	115	150

OVEN´S DESCRIPTION

The air inlet is controlled by opening or closing the ash collector.

1. Firebreak
2. Pull regulator
(▬ Closed / ▌Open)
3. Door handle
4. Grills
5. Thermometer
6. Indoor grids
7. Door
8. Grease collector
9. Ash collector

www.mibrasa.com | tel. +34 610 17 27 63 | **mibrasa@mibrasa.com**